VIBRATING SCREED MANUAL

MULTIVIBE®

Table of Contents

i.....COVER

1.....TABLE OF CONTENTS

2.....SAFETY INTRODUCTION

3.....HEALTH AND SAFETY

4.....ASSEMBLY

5.....SCREED OPERATION

6.....METHODS

7.....DRILL SCREED INTRO

8-10.....PR100EC KIT ASSEMBLY AND PARTS

11.....HUMMER SCREED INTRO

12-13.....HUMMER SCREED ASSEMBLY AND PARTS LIST

14.....PR100 – TWO-HANDLED SCREED INTRO

15.....PR100 ASSEMBLY AND PARTS LIST

16.....PR100H POWER ROD ASSEMBLY AND PARTS LIST

17.....FLOAT BARS

18.....WARRANTY

JLIN Corp
3125 N. Friendship Rd.
Paducah, Ky. 42001

Email

Sales - sales@multivibe.com

Phone # 1-270-554-2615
1-877-220-6652 toll free phone
1-270-554-0631 fax

www.multivibe.com

MULTIVIBE
CONCRETE FINISHING EQUIPMENT

Consumer and/or Operator Safety

This symbol is used throughout this Manual.

As with any item of power equipment, it is necessary that you learn and observe ALL safety precautions. This includes the care for the machine as well as personal safety. This machine is only as dangerous as the person who is operating it. DO NOT BE CARELESS! In the beginning you will be cautious. Do not allow yourself to become careless after you have gotten acquainted with the machine and its operation. DONôT EXPOSE YOURSELF OR OTHERS TO DANGER. After you have become acquainted with this machine and formed good operating habits, your proficiency will improve rapidly toward expert ability.

Never allow children to operate this unit. Keep area of operation clear of all persons, particularly small children and pets.

TRAINING

Read the Operating and Service Instruction Manual carefully.
Be thoroughly familiar with the controls and proper use of the equipment

DRESS PROPERLY FOR THE JOB

ALWAYS wear goggles or face shield for eye protection. Wear protective head gear. These precautions are used to prevent the possibility of being struck by small flying particles.

PREPARATION

Inspect the throttle control lever and cables. Make sure it is unobstructed and free from damage. Check the cable linkage running to the carburetor for kinks, loose fittings and obstructions that could impair operation of the throttle.
Inspect the entire machine for loose parts, nuts, bolts, screws, etc.
DO NOT SMOKE WHILE FILLING THE TANK, OR STARTING THE ENGINE.

OPERATION

NEVER start this machine or run the engine inside a closed room or building. Fumes from the exhaust contain dangerous carbon monoxide.
NEVER remove the fuel tank cap while the engine is running.

NOTE: NEW EXHAUSTS WILL LOOSEN UP DUE TO "BURN IN" …check this carefully during the first few hours of operation.
USE CAUTION AT ALL TIMES WHEN WORKING WITH OTHERS

NEVER operate this machine when you are. under the INFLUENCE of alcohol, drugs or medication.

MULTIVIBE
CONCRETE FINISHING EQUIPMENT

HEALTH AND SAFETY

As with all vibratory equipment, precaution must be taken to ensure the safety and well-being of operatives.

Sustained use of vibratory equipment can result in the condition known as ñVibration White Fingerò. Such a condition is damaging and must be avoided at all cost.

Vibration figures for the Multivibe Unit DO NOT EXCEED 7.0 m/s2 when used in accordance with the directions contained in this manual.

CAUTION No one should operate this equipment without completely reading and understanding this manual and the Honda engine manual. Any questions should be directed to your distributor, JLin Corporation (1-877-220-6652, 1-270-554-2615, FAX 1-270-554-0631) or Honda Power (contact info in the Honda manual).

Under normal screeding conditions, the Multivibe vibrator products do not have complaints of excessive vibration issues to the hands.

Maximum speed is not required to properly consolidate concrete. Half throttle will properly consolidate concrete and lengthen equipment life.

Caution should be exercised to adjust the vibration speed for maximum operation comfort to the hands.

STOP!

If vibration is on operator hands, slow down RPM so vibration will move back to screed board.

If there is discomfort to the hands and adjusting the speed does not correct any discomfort.

NOTE: The Multivibe Vibratory Screeds are designed for leveling wet concrete and for no other purpose intended.

MULTIVIBE
CONCRETE FINISHING EQUIPMENT

ASSEMBLY

Tools are not required for the assembly of your Multivibe Vibrating screed.

Pre-assembly of the Honda Engine Unit in Drillscreed motors has been undertaken at the factory, less fitment of the relative throttle assemblies.

Simply unpack the screed and your chosen Magnesium Floater Bar and attach the bar to the screed with the lever screws provided.

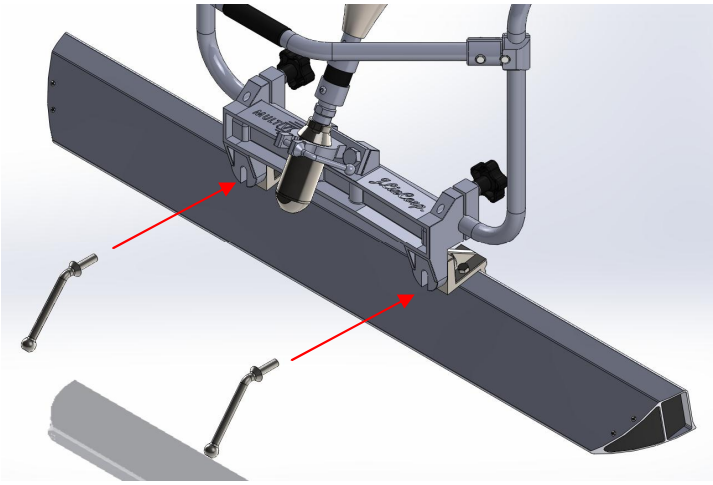

WARNING: If the equipment is dispatched via carrier, there will be no fuel or oil in the engine unit. Fill with recommended oil to the appropriate level on the dipstick and use Unleaded Petrol ONLY! DO NOT mix the fuel. The Honda Engine supplied is a 4-Stroke Engine Unit.

Should your chosen machine be the PR100EC Drill Unit, pre-charge the battery unit to FULL CHARGE.

MULTIVIBE
CONCRETE FINISHING EQUIPMENT

SCREED OPERATION

IMPORTANT: Running your Multivibe on full throttle is **NOT** necessary and will only shorten the life of the engine unit and screed bar assembly.

- HOW DO I KNOW IF CORRECT THROTTLE POSITION IS USED?

This is a frequently asked question and will depend on factors such as the type of mix used, consistency of the mix and slump used (etc.) In general, if excessive ñspittingò is seen at the very extremities of the Floater Bar, too much throttle is being used.
Half speed throttle is normally more than efficient.

- WHAT IS AN IDEAL SLUMP FOR THE MACHINE?

Remember that we are using a wet screed machine. The machine floats on the surface of the concrete, compacts and levels. Use a 150mm (6ò) slump and we are effectively NOT pouring concrete, we are pouring soup, use a 50mm (2ò) slump and we are killing ourselves trying to lay the stuff.
Ideally we need to be using a 100mm (4ò) slump for these wet screed projects and if we do, we all end up as Mr. Happy!

- TO WHAT DEPTH WILL THE MACHINE COMPACT THE CONCRETE?

Another good question and once again this will depend upon mix characteristics. Effectively you should experience good consolidation to a depth of 150mm (6ò) and we have had good test results to 200mm (8ò) on many occasions
Do remember that edge forms (particularly timber forms) absorb a lot of vibration and we will always recommend using an internal vibratory poker along these edges such as the Multivibe Hummer (needless to say this is available from ourselves).

- WHEN MAKING ADDITIONAL PASSES OVER THE CONCRETE HOW MUCH OVERLAP SHALL BE USED?

Always allow a good 300mm (12ò) overlap and ensure there is always sufficient concrete in the bay well in excess of the width of the floater bar being used. The reason for this is you do not want there to be a ñfall awayò on that side of the blade where concrete is still being poured.

MULTIVIBE
CONCRETE FINISHING EQUIPMENT

METHOD

Different Wet Screed methods can be applied and we will discuss the 3 preferred options.

OPTION 1--------Grid Pattern

Laser-spot using a laser staff especially adapted with a footplate to ensure that it sits right at the surface and does not slide into the concrete, so preventing accurate measurement (strangely enough the staffs are manufactured and available from us).

Do this in a 1 metre grid fashion, ensuring a reasonable ñrunò can be made with the Vibratory screed before overlapping and coming back with the 2nd run pass.

When checking the level with the laser, use a cement trowel to float off a small circle. Check and put an X to establish the checked areas. It is wise to use a Texas Placer to rake out between these points prior to commencing the screeding process.

OPTION 2- GRADE PADS

To significantly cut down on the laser spotting, a Magnesium Beam of, say a 5mm length, can be used to briefly create 2 adjacent pads of concrete at a width slightly under the length of the floater bar used.
Use 2 laser spots at either end of the beam and screed pads, approximately 300mm wide. Repeat the process at a width of, say, 2.4m (8ft) if using a 3m wide Floater Bar, walk between the pads, trim the concrete level with your Texas placer and then screed off with your Multivibe.

OPTION 3-GRADE PINS

A lesser used method is grade pins driven into the sub base (where allowable) at the appropriate grade level, which can be used as the reference when screeding through with the Multivibe.
These grade pins are horizontally driven in a grid fashion at 1m or 1.5m centres
The finisher floats off a small circle around the pin and removes it prior to screeding.
This method is used when a laser level is unavailable.

MULTIVIBE
CONCRETE FINISHING EQUIPMENT

MULTIVIBE DRILLSCREED

Original Drillscreeds ex factory have been fitted with Milwaukee V28 and M28 latest model Powerdrills. When ordering the factory must know which model will be used because the drill clamps are different.

The operation of the drillscreed is entirely similar to the Honda Petrol Engine version as it relates to the screeding process,

The significant difference is, of course, the duration of power available, as this is a battery operated version.

The unit is supplied with 2 nos. Lithium Ion V28 or M28 Batteries. Advantages of this new technology are that its gradual power loss is experienced until complete failure, when the battery will require re-charging.
Indicator lights on the battery itself provide a visual indication of the power usage at any given time.

HOW MUCH CONCRETE CAN I SCREED WITH A SINGLE BATTERY?

This will depend on the density of the mix, slump used, etc. In general and in ideal conditions it should be possible to screed approximately about 30 minutes at ½ speed. You should be able to place 2 truck loads then get 2nd battery. Excessively dry concrete, which would require additional vibration, would shorten the life of the battery. The M28 will screed more area.

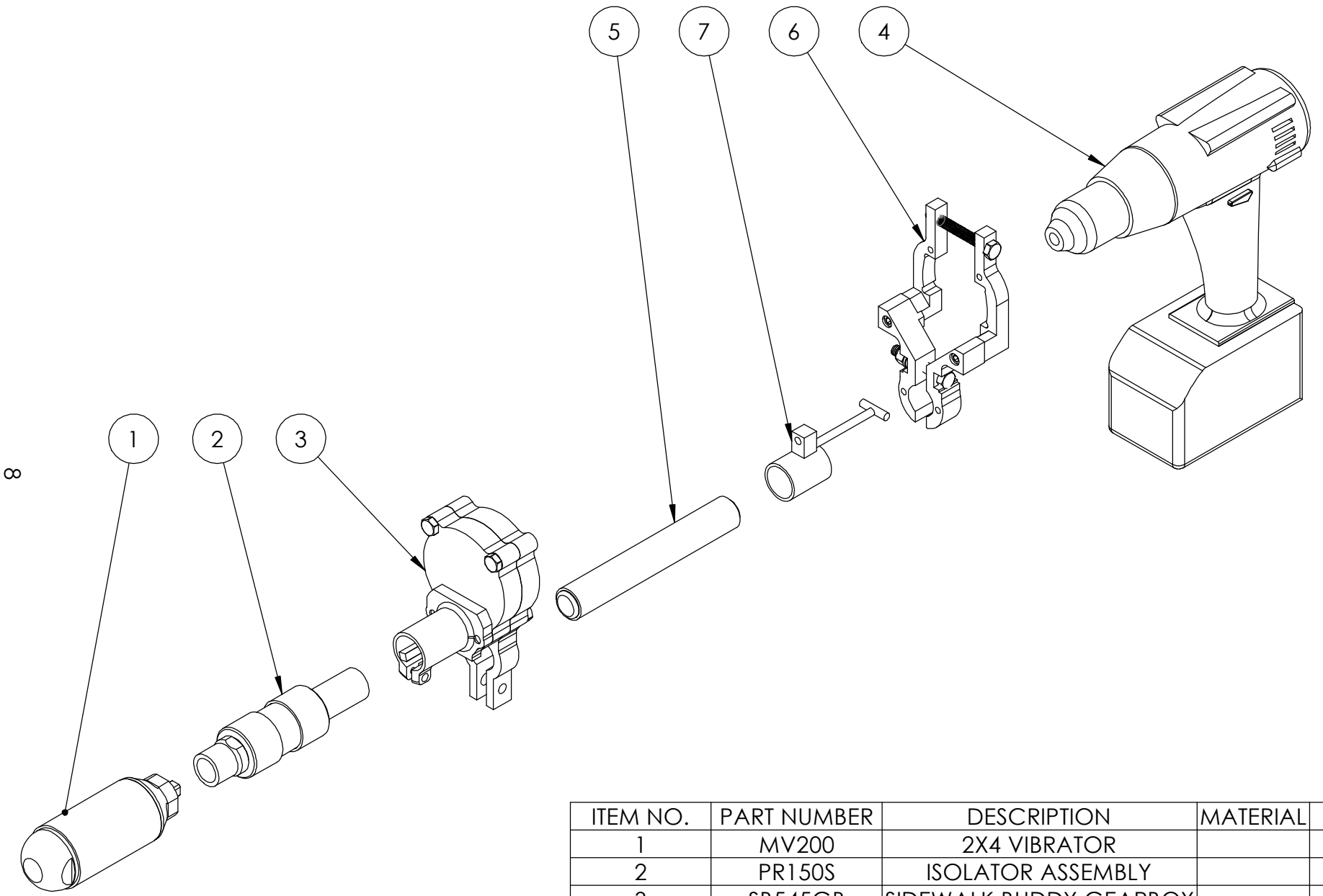

ITEM NO.	PART NUMBER	DESCRIPTION	MATERIAL	QTY.
1	MV200	2X4 VIBRATOR		1
2	PR150S	ISOLATOR ASSEMBLY		1
3	SB545GB	SIDEWALK BUDDY GEARBOX		1
4	M28DC	28V CORDLESS DRILL		1
5	ST65	STABILIZER TUBE ASSEMBLY		1
6	M28C	DRILL CLAMP ASSEMBLY		1
7	PR160	THROTTLE CABLE ADAPTER		1

PROPERTY OF JLIN CORP.
CONFIDENTIAL USE ONLY.

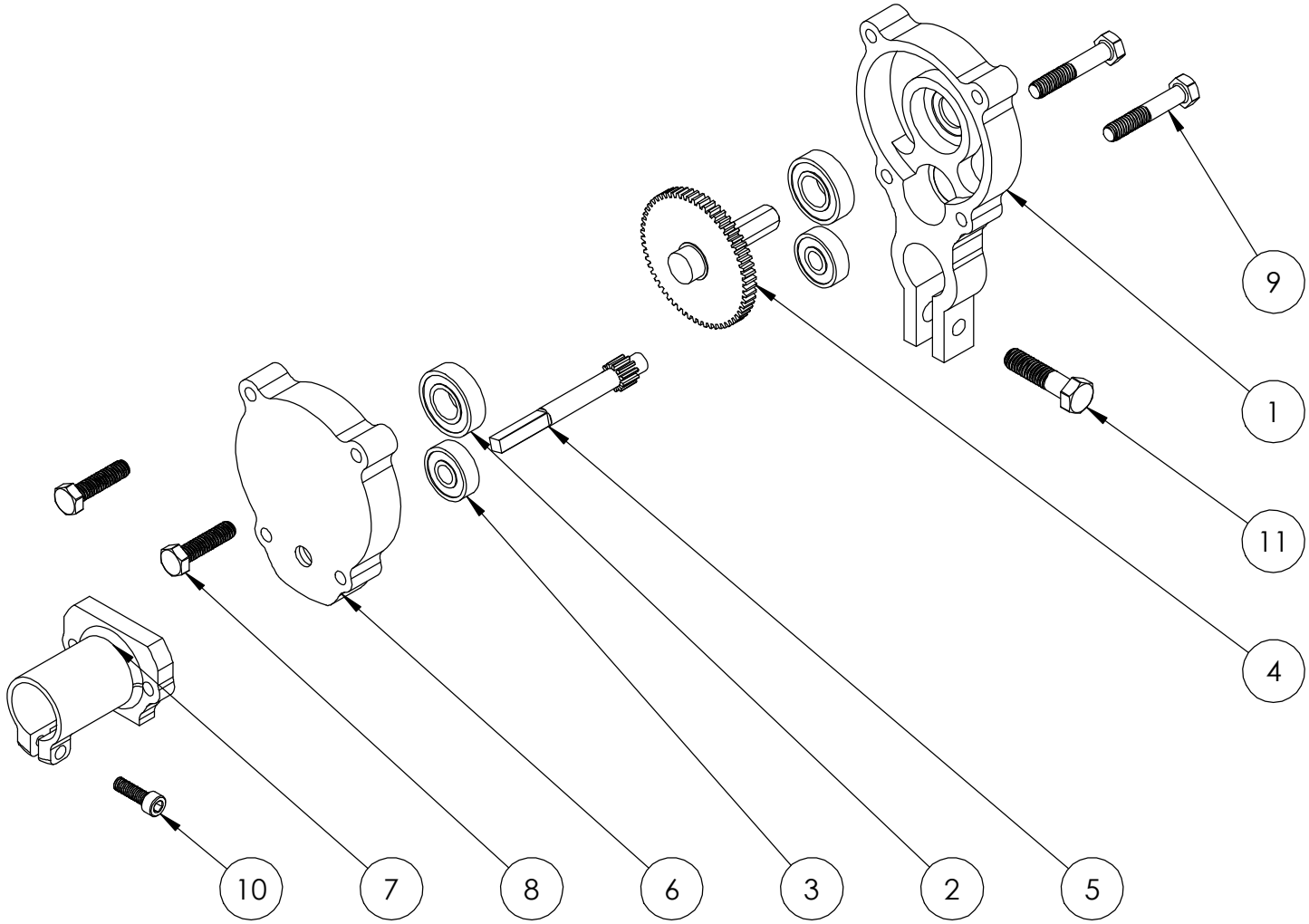

ITEM NO.	PART NUMBER	DESCRIPTION	MATERIAL	QTY.
1	GBWC	BOX HALF WITH CLAMP		1
2	GB602	LARGE BEARING		2
3	GB99	SMALL BEARING		2
4	GB2460	SPUR GEAR WITH SHAFT		1
5	GB2411	PINION GEAR		1
6	GBWOC	BOX HALF WITHOUT CLAMP		1
7	GBTA	1" TUBE ADAPTER		1
8	GB125	5/16-18 X 1.25" HHCS		2
9	PR211	5/16-18 X 1.75 HHCS		2
10	FC20	1.0 X 20 M6 SHCS		1
11	D103	3/8-16 X 1.5IN HHCS		1

PROPERTY OF JLIN CORP.
CONFIDENTIAL USE ONLY.

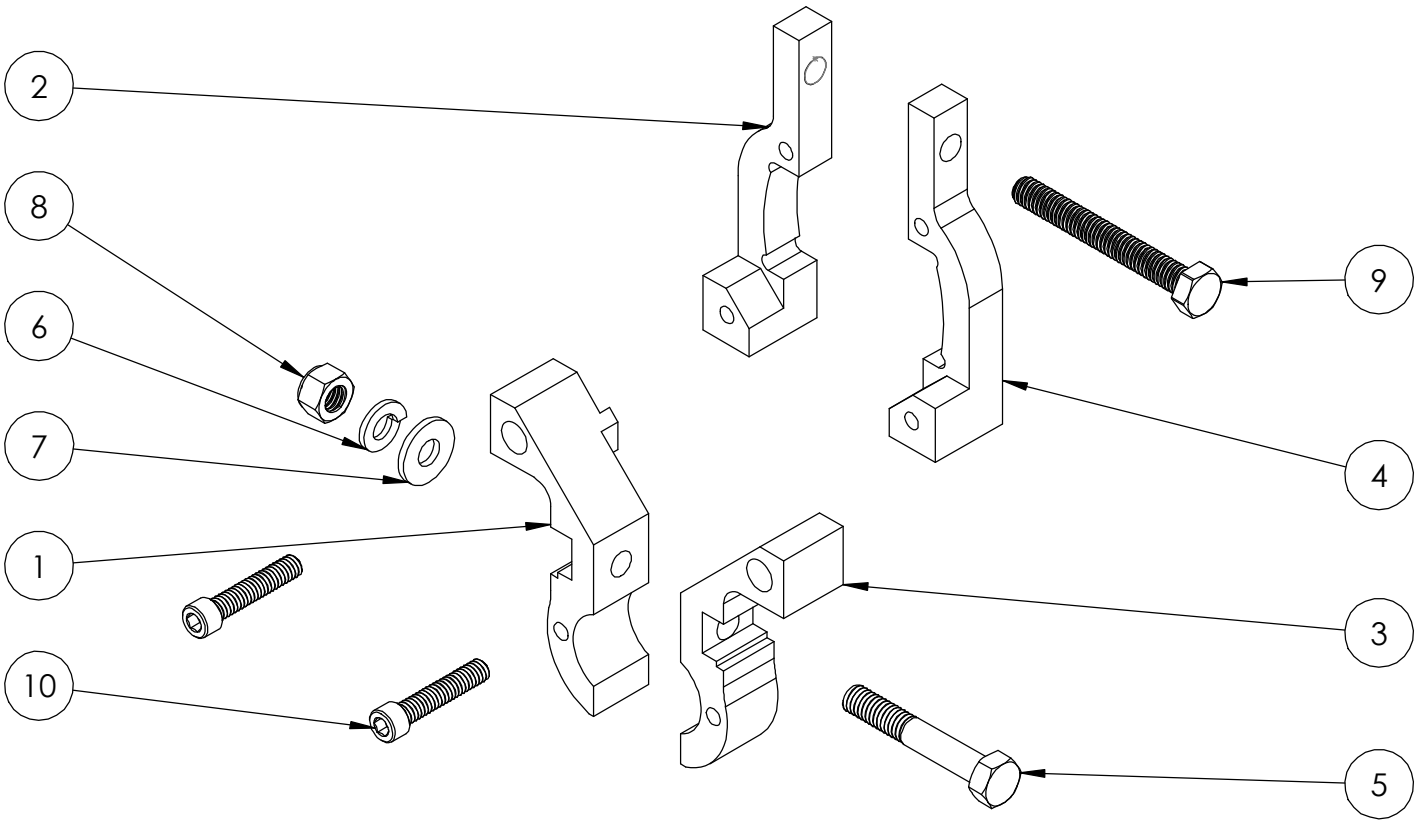

ITEM NO.	PART NUMBER	DESCRIPTION	MATERIAL	QTY.
1	SC155E-2	LEFT-BOTTOM CLAMP		1
2	SC155E-1	LEFT-TOP CLAMP		1
3	SC156E-2	RIGHT-BOTTOM CLAMP		1
4	SC156E-1	RIGHT-TOP CLAMP		1
5	V516	5/16-18 x 2" HHCS		1
6	MV412	5/16 LOCK WASHER		1
7	MV415	1/4" FLAT WASHER		1
8	MV411	5/16-18 LOCKING NUT		1
9	MV414	5/16-18 X 2.5IN HHCS		1
10	MV320	.25-20 X 1IN SHCS		2

PROPERTY OF JLIN CORP.
CONFIDENTIAL USE ONLY.

MULTIVIBE
CONCRETE FINISHING EQUIPMENT

HUMMERSCREED

The Hummer 2-Handle Screed is available to provide a duel purpose unit, particularly suitable for the Construction Plant Hirers.

It offers a 2 in 1 machine capable of being used as a ñpowerscreedò and as a separate stand alone Vibratory Poker Unit.

Unlike the traditional 2-Hamdle Multivibe with centrally located Honda Engine Unit, the Hummer Power Motor is seated on the upper right frame handle.

The engine hose drive and poker head complete is quickly removable from the 2-handle screed frame without the use of tools.

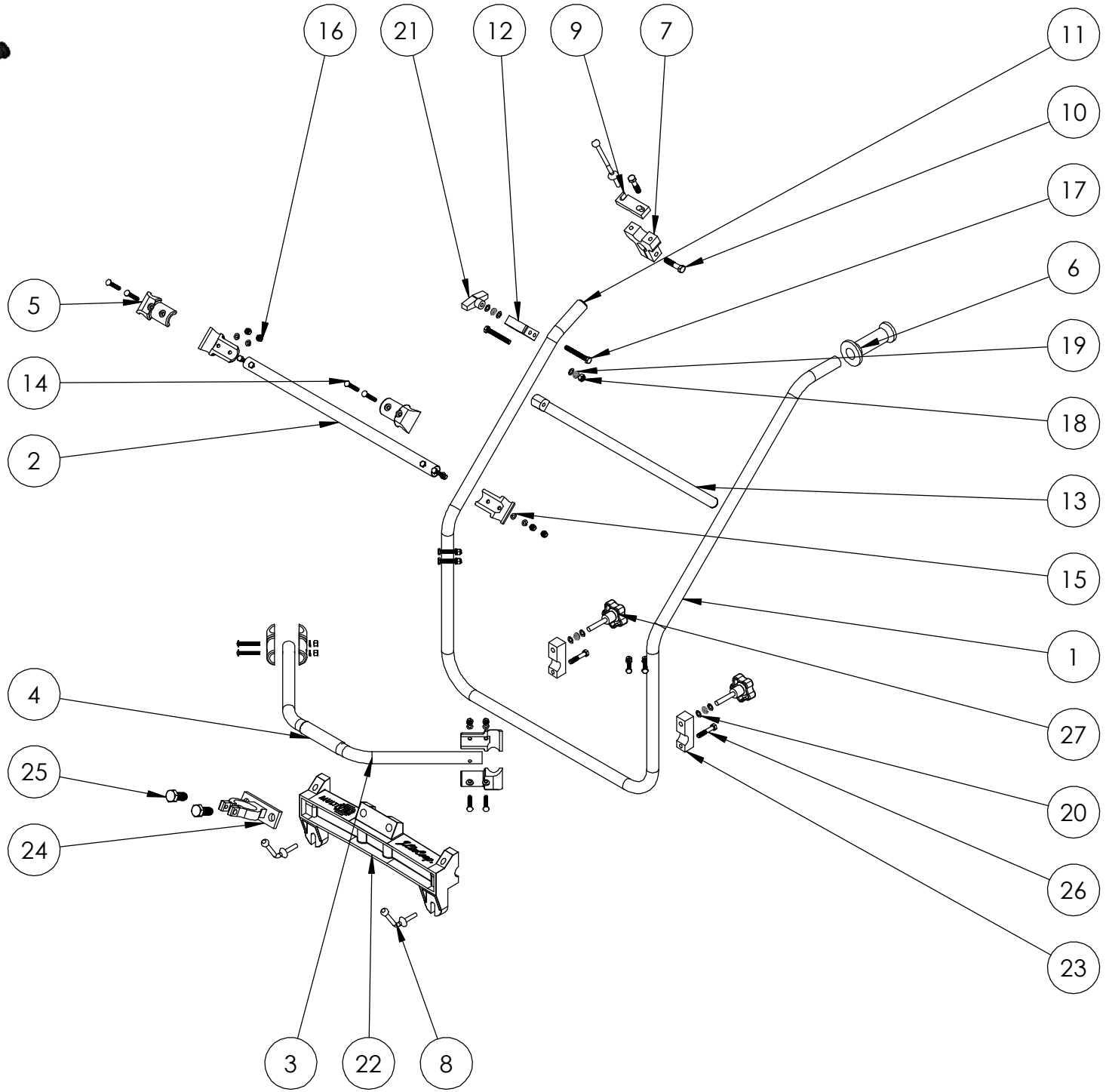

PROPERTY OF JLIN CORP.
CONFIDENTIAL USE ONLY.

ITEM NO.	PART NUMBER	DESCRIPTION	MATERIAL	QTY.
1	PR6051	MAIN FRAME TUBING		1
2	PR602	STRAIGHT CROSS BAR		1
3	PR603	LIFT HANDLE CROSS BAR		1
4	PR604	LIFT HANDLE CENTER GRIP		1
5	PR610	CROSS BAR CLAMP		4
6	PR601	HANDLE GRIP		1
7	MV311	1X3X3 ALUMINUM BRACKET		1
8	MV151	5/16 LEVER SCREW		3
9	MV310	1/2 X 1 X 4 ALUMINUM CAP		1
10	MV302	3/8-16 X 1.75 HHCS		2
11	MV314	7/8" CAP PLUG		1
12	MV413	ALUMINUM U-CLAMP		1
13	MV4001	HUMMER KICKSTAND		1
14	PR616	1/4-20 x 1.75 CARRIAGE BOLT		8
15	PR612	1/4-20 LOCK WASHER		8
16	PR611	.25-20 LOCKING NUT		8
17	MV414	5/16-18 X 2.5IN HHCS		2
18	MV411	5/16-18 LOCKING NUT		1
19	MV412	5/16 LOCK WASHER		4
20	MV417	5/16 FLAT WASHER		7
21	MV416	5/16 X 2.5 PLASTIC KNOB		1
22	MV535	300 CASTING		1
23	MV540	TUBING CAP		2
24	PR201	2" VIBRATOR CLAMP		1
25	MV158	5/8-11 X 1.5 HHCS		2
26	PR211	5/16-18 X 1.75 HHCS		2
27	PR206	5/16-16 X PLASTIC KNOB		2

PROPERTY OF JLIN CORP.
CONFIDENTIAL USE ONLY.

MULTIVIBE
CONCRETE FINISHING EQUIPMENT

PR100 TWO HANDLED SCREED

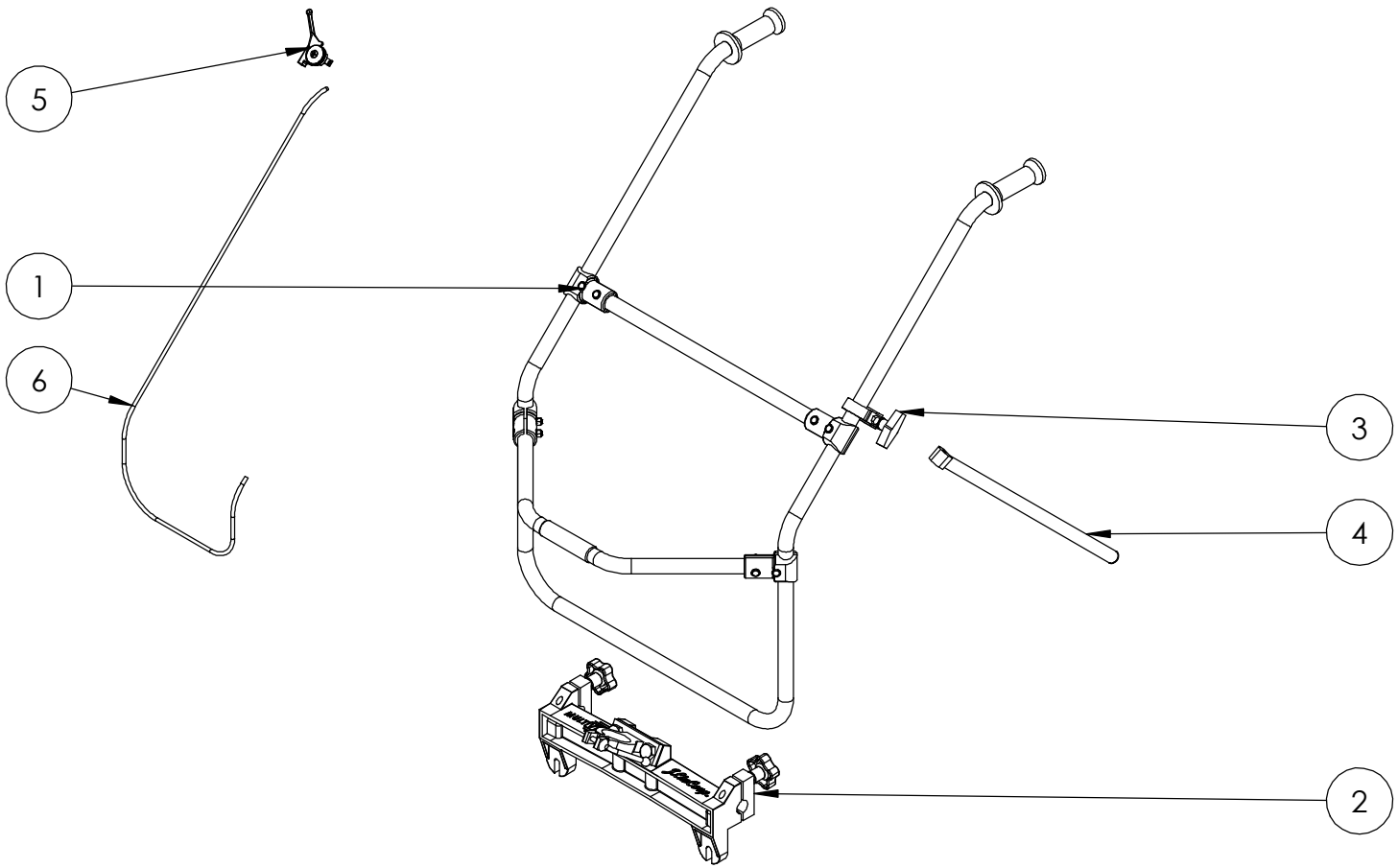

ITEM NO.	PART NUMBER	DESCRIPTION	MATERIAL	QTY.
1	PR600	FRAME TUBING AND GRIPS		1
2	PR200	CASTING AND CONNECTOR ASSEMBLY		1
3	MV410	KICKSTAND CONNECTOR		1
4	MV400	KICKSTAND		1
5	PR327	THROTTLE ASSEMBLY		1
6	PR328	THROTTLE CABLE		1

PROPERTY OF JLIN CORP.
CONFIDENTIAL USE ONLY.

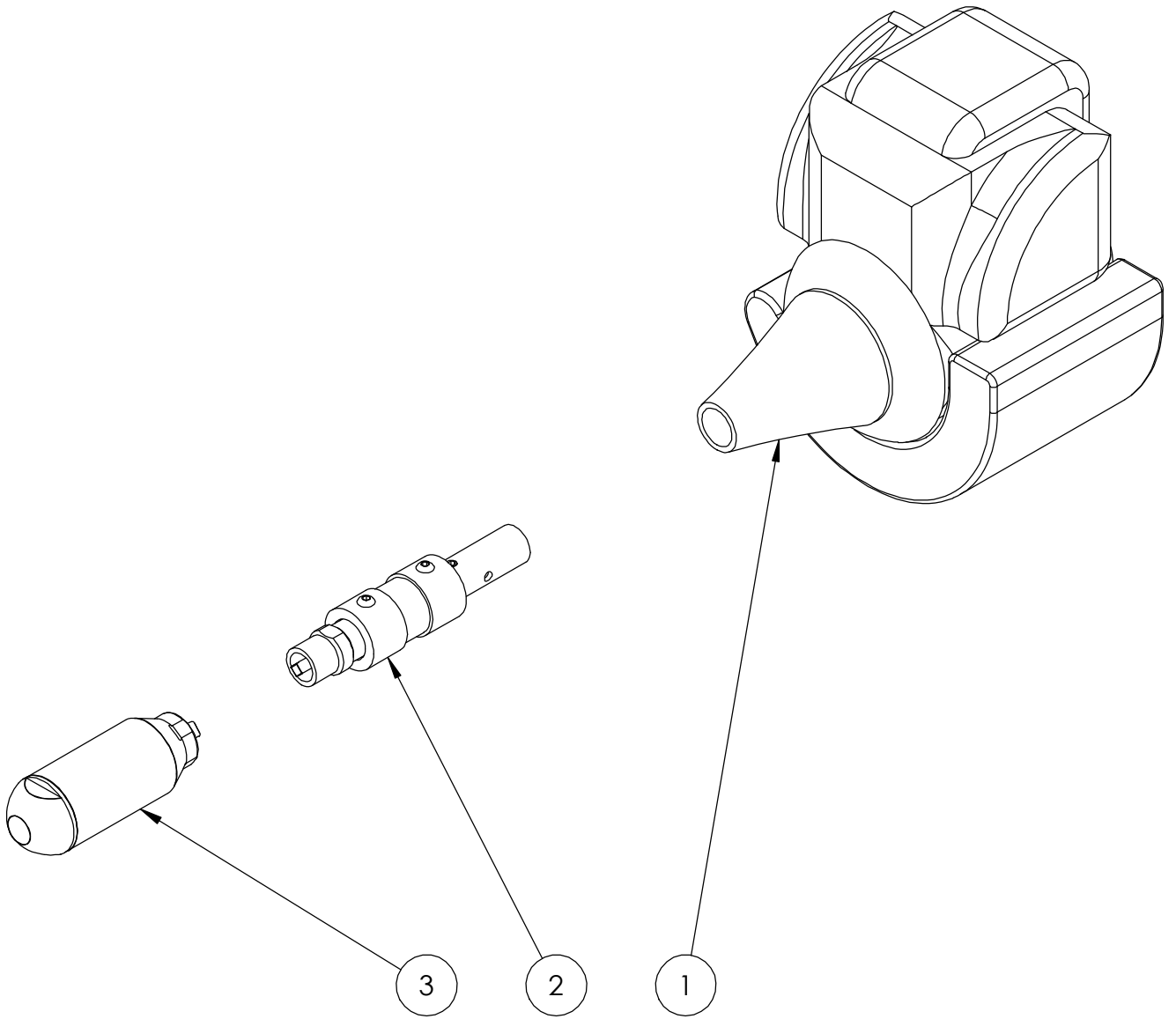

ITEM NO.	PART NUMBER	DESCRIPTION	MATERIAL	Default/ QTY.
1	MV65H	HONDA ENGINE COMPLETE - GX35		1
2	PR150	ISOLATOR ASSEMBLY		1
3	MV200	2X4 VIBRATOR		1

PROPERTY OF JLIN CORP.
CONFIDENTIAL USE ONLY.

MULTIVIBE
CONCRETE FINISHING EQUIPMENT

MAGNESIUM FLOAT BARS

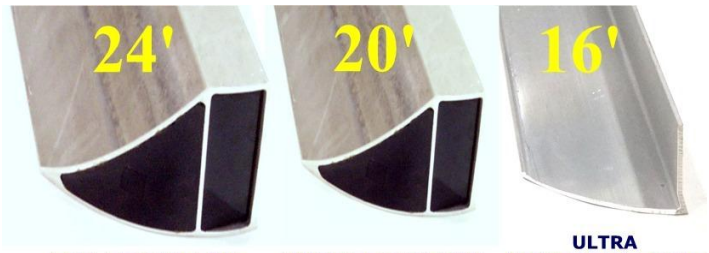

4ft Magnesium Floater Bar	1200mm	LB104
5ft Magnesium Floater Bar	1500mm	LB105
6ft Magnesium Floater Bar	1800mm	LB106
8ft Magnesium Floater Bar	2400mm	LB108
10ft.Magnesium Floater Bar	3000mm	LB110
12ft Magnesium Floater Bar	3650mm	LB112
14ft Magnesium Floater Bar	4230mm	LB114
16ft Magnesium Floater Bar	4880mm	LB116

Note: 5.5m (18ft), 6.0m (20ft), and 7230m (24ft) bars are available on special order for flatter floors.

DUAL SET UP OPTION:

Contact the factory for specific requirements.
Conditions of use will apply.

Parts:

Cast Mounting Bracket (individual)	LB171
Lever Screw (individual)	FB172

MULTIVIBE
CONCRETE FINISHING EQUIPMENT

WARRANTY

Subject to all of the terms stated herein, JLin Corp. (the company) warranty to the original wholesale purchaser and original end user, only that those components of each new Multivibe Vibratory screed (and any replacement original parts supplied by the company) under normal use and service will be free supplied during the warranty period.

Such periods will cover a period of 1 year from original purchase and dispatch ex the companyôs works. Warranty implies that materials used are free from defect in material and workmanship. Warranty shall be limited to the supply of parts and labor and it shall be the duty of the original purchaser to ensure the return of the equipment to the factory for inspection and repair.

On acceptance of warranty, the goods will be returned to the end user at the companyôs cost.

It must be noted that should the company be required to attend on site or at a specific location specified by the end user and the equipment NOT returned to the factory during the warranty period, each expense incurred in travel, will be the responsibility of the end user.

This warranty will be null and void should the following conditions be breached.

(A) The equipment has been in operation by the end user for a period exceeding 180 days from date of delivery.
(B) The equipment is used for any purpose other than those purposes for which it was designed.
(C) The equipment is repaired by a third party or outside source without the express authorization of the factory.
(D) The equipment is altered or modified in any way which could adversely affect its operation or reliability.
(E) The equipment has been subject to abuse, misuse, negligence or involved in any accident which would affect its proper operation.

EXCEPT AS EXPRESSLY STATED IN THE WARRANTY STATEMENT, THE COMPANY MAKES NO WARRANTY EXPRESSED OR IMPLIED THAT THE GOODS, EQUIPMENT OR MERCHANDISE ARE FIT FOR ANY PARTICULAR PURPOSE OTHER THAN THE SCREEDING OF WET CONCRETE, NOR DOES IT MAKE ANY OTHER WARRANTY AGAINST INFRINGEMENT.

The company will **NOT** accept any liability for incidental, consequential, special or general costs in relation to the use of the equipment in the field, nor will accept any other damages arising however they may be caused.